Spark Plasma Synthesis (SPS) Device for Sintering of Nanomaterials

N. Jalabadze, L. Nadaraia, A. Mikeladze, R. Chedia, T. Kukava and L. Khundadze

Republic Center for Structure Researches, Technical University of Georgia
77, Kostava Str., Tbilisi 0175, Georgia, Tel/Fax: (995 32) 332197, E-mail: jalabadze@gtu.ge

ABSTRACT

It is known that work pieces with nanocrystalline structure condition have much higher performance than those with an ordinary structure. There are known number of techniques for manufacturing of nanocrystalline materials in powder condition however a question of manufacturing bulk pieces in the same nanocrystalline state mentioned is that compaction and synthesizing of nanocrystalline powders are accompanied with intensive growth of particles – the process which promotes to formation of pieces in an ordinary crystalline state instead of being crystallized in the desirable nanocrystalline state. Most promising method for fabrication of pieces with the preserved nanocrystalline structure is compaction and sintering by using Spark Plasma Synthesis (SPS) process. Present work is dedicated to the problems and advantages of the SPS process which provides synthesis of composites with nanocrystalline structure.

Keywords: Nanotechnology, Nanocrystalline Materials, Spark Plasma Synthesis.

1 INTRODUCTION

Main methods for manufacturing nanocrystalline materials are: thermal synthesis; synthesis in salt melts; hydrothermal synthesis; sol-gel synthesis. All those methods are used for preparation of nanocrystalline powders. A number of new techniques for powder consolidation aimed at fully dense bulk nanocrystalline materials have been proposed in recent years [1-6]. Preparation of bulk pieces requires compaction and sintering of the obtained nanocrystalline powders. This process is connected with lots of problems, namely, it is very difficult to preserve nanocrystalline structure of powders in the bulk. Standard methods for manufacturing of bulk material are: cold compaction with further sintering, hot pressing, sintering under high pressure, electric discharge synthesis, shock-wave sintering and gasostate sintering. Basing on these methods by different companies there were designed and built various installations: for hot pressing, max temperature 2400° C, max pressure 40MPa (1000A, Thermal Technology INC., USA); High temperature graphite furnace, max temperature 2400° C, equipped with quenching facilities (1000-4560-FP20, Thermal Technology INC., USA); Spark Plasma Sintering unit (SPS), max temperature 2000° C, max. load 20000 kN (Dr Sinter 2050, Sumitomo Coal Mining Co., Ltd, Japan); Microwave sintering unit, 6 kW operating at 2.45 GHz (S6G Cober Electronics Inc., USA) and etc Using of these methods and of an appropriate installation is not effective because of intensive growth of grains which stimulates formation of an ordinary structure instead of the desired nanostructure. One way to prevent the processes of grain growth is adding of inhibitors to the powders. However this route is not the best one because composition of the material will possibly be changed due to contaminations brought in the powders: nanocrystallinity may improve properties of the material, however adding of inhibitors may reduce these properties. Therefore improving of characteristics induced by preservation of nanocrystallinity is not as efficient as expected. Another way to prevent the processes of grain growth is: guiding of sintering processes in the time limited to a certain extent. This route is realizable in the installation based on using SPS method which is considerably new and it can be used to conduct *in situ* preparation and synthesis of composites with superfine microstructures. In spite of the fact that there are already designed and constructed the SPS method-based industrial installations, physical essence of the provided processes are not yet clarified to final extent. Therefore, upon fabrication of any new material by using this installation the scientists continue to study the provided processes of sintering.

2 PRINCIPAL PART

Design of the installation is shown in Fig. 1a. Pulsed DC of high magnitude passes through the powder located in graphite crucible. The current passing through the powder creates an arc between powder particles giving start to plasma processes and to the process of sintering between particles. The arc is created between the surfaces of particles only within a short period since frequency of pulsed DC is high. This short period is quite sufficient to create high temperature and appropriately to provide the process of sintering. However this time is not enough for the temperature to spread through nanocrystalline particles and elevate their intrinsic temperature. That is why temperature of the whole mass remains rather low and does not promote to the processes of grain growth, while at the points where particle surfaces get in contact, the temperature is quite sufficient to provide sintering processes. Schematically the process is shown in Fig.1b. Block-scheme of the developed device is shown in Fig.1c.

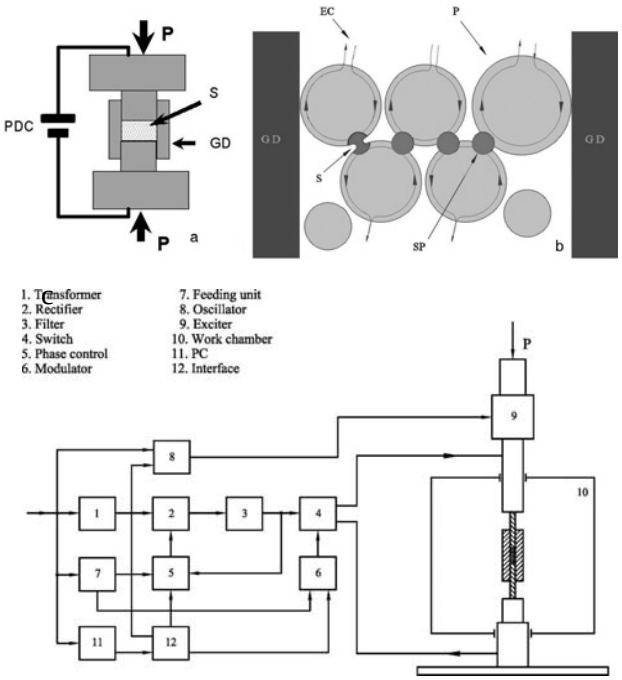

Fig.1. Scheme of the SPS device (a) and of the process of sintering; (b) – PDC - pulsed DC, GD - graphite die, S – powder sample, P – pressure loading, EC- electric current, s – spark, sp – spark plasma and p- powder particles; (c) Block-scheme of the developed device.

We have developed a nanotechnology for manufacturing of powders of carbide materials and hard metals. After compaction and sintering of the obtained nanopowders with SPS technology the structure of alloys remains nanocrystalline.

Previous investigations showed that using of SPS method is not effective for nonconductive materials since in such materials arc between particles can not be created. In some dielectric materials compensation of lack of conductivity is realized at high temperatures. Current passing through the graphite moulds makes heat released thus providing heating of powder in the mould and making it conductive. Then plasma processes and appropriately sintering processes are realized and nanocrystalline state of particles is preserved. It is evident that if the used powder at high temperature is not conductive, then arc-plasma processes will not be provided; for the provision of sintering processes it is necessary to elevate the temperature of the mass but in this situation nanocrystalline state can not be preserved.

There is also another problem connected with agglomeration of nanopowder particles. At using of such powders arc-plasma processes are realized not between nano particles but between aggregated particles and appropriately sintering processes proceed between aggregated particles. In such cases, pores presented within the aggregated particles remain unchanged. Therefore resulted sintered product will be nanocrystalline but with lots of pores. Consequently such material will not be of high performance. It is possible to use inhibitors for producing non-aggregated powders, however as stated above, their using is also connected with some problems. Our experiments directed to preparation of nanocrystalline scintillation materials certify the above mentioned considerations Number of different composite materials have been obtained through using the device.

Fig. 2 shows microphotographs of a sample of Lutetium oxyorthosilicate - Lu_2SiO_5, obtained by SPS method. We can see that though the initial powder was in nanocrystalline condition, particles grew up to 1 micron after sintering (Fig. 2a). A reason for such behavior was that silicate powder was not conductive. Therefore arc-plasma process was not realized. Sintering was realized only on the account of heat released from the mould and it induced significant grow of grains. Fig. 2b can be used for the illustration of negative influence of aggregation. In spite of the preserved nanocrystallinity, the obtained whole mass is porous.

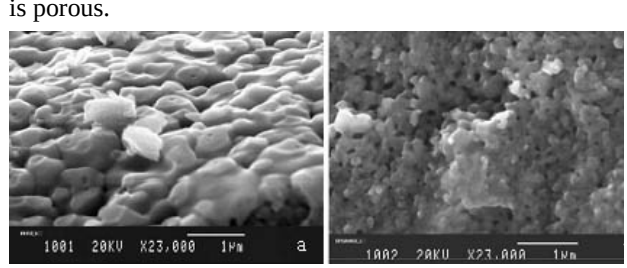

Fig.2. SEM microphotographies of the samples of lutetium oxyorthosilicate Lu2SiO5 with coarse (a) and nanosize (b) crystallites.

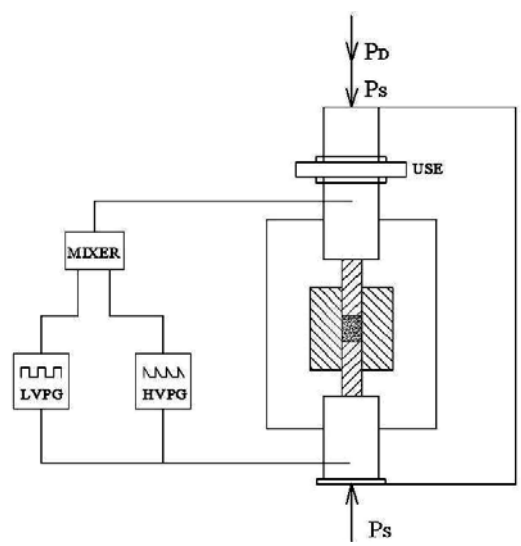

Fig.3. Schematic expression of the new device: LVPG – Low voltage pulsed generator, HVPG – High voltage pulsed generator, MIXER – Special unit for mixing pulsed current of low and high voltages, Ps- Statical loading P_D - Pulsed dynamic loading and USE- Ultrasonic excitation unit.

NSTI-Nanotech 2009, www.nsti.org, ISBN 978-1-4398-1782-7 Vol. 1, 2009

Our approach to the noted problems is providing of works for creation of a new device equipped with the measures for using the SPS, condenser discharge, pulsed pressure and ultrasonic excitation methods (Fig. 3).

Using of the method of condenser discharge gives capability of creating spark between nonconductive powder particles creating plasma and then the process will be provided as in a standard SPS device: compaction of powder proceeds so that nanostructure of the material will be preserved; using of pulsed pressure and ultrasonic method will provide reducing to minimum of porosity of the bulk material.

There were carried out experiments on fabrication of bulk samples from scintillation nanopowders. During the experiments we were facing problems of two types: one of the problems concerns heating of a sample and the second - measuring of a sample temperature. Since the applied scintillation material was not conductive we could not use press-form for direct heating of a sample (Fig. 4a). At the given stage using of press-forms with a sample indirect heating (Fig.4b) could not maintain nanocrystallinity of scintillation material (Fig.5).

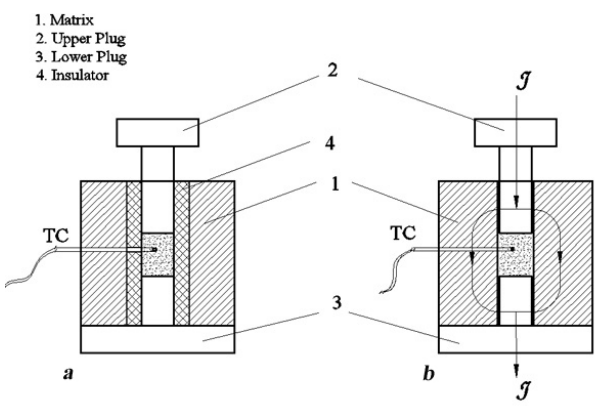

Fig. 4. Press-form for sintering nanocrystalline materials.

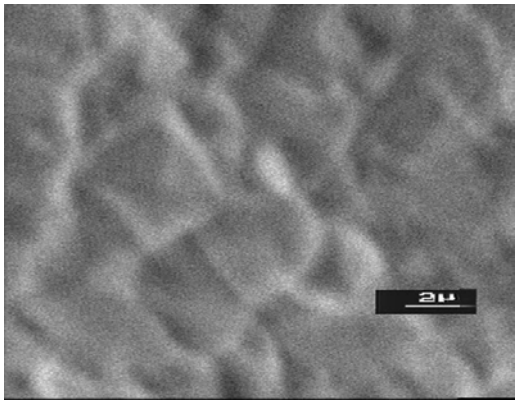

Fig. 5. SEM image of the sintered lutetium orthosilicate (LSO).

Direct heating was successfully used for preparing hard metal materials as the samples were conductive for electric power. Direct pass of the pulsed current provides for realization of plasma-sparkling processes between nanoparticles. Unique experiments were conducted on fabrication of nanocrystalline hard metal with the help of the developed device immediately from the alloy components omitting the procedure of preparing initial nanopowders. Fully sintered nanocrystalline hard metal of the (TiW,Mo)C-Ni system was obtained from the charge comprised of titanium hydride, nickel chloride, molybdenum- and tungsten oxides and soot (Fig. 6).

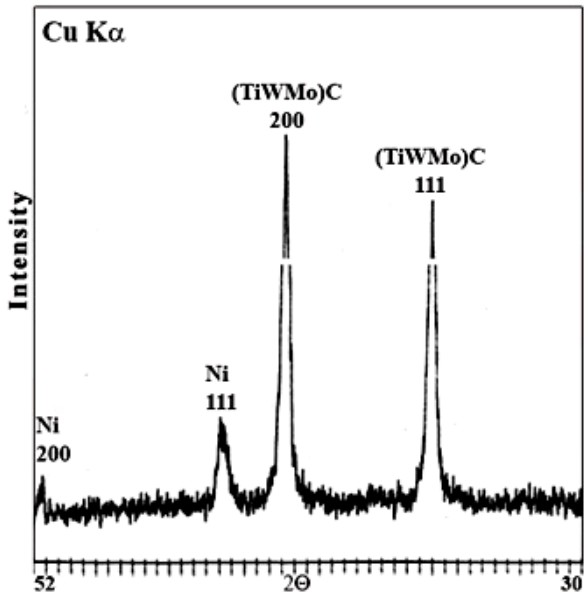

Fig 6. X-ray diffraction patterns of Fully sintered nanocrystalline hard metal of the (TiW,Mo)C-Ni system obtained from the charge comprised of TiH_2, $NiCl_2$, MoO_3, WO_3 and soot.

Indirect heating of a sample causes increase to common temperature and promotes intensive grain growth that preventing from the possibility of preparing transparent scintillation material. Current works are directed at searching for conductive materials to be used for cladding powder nanoparticles. Passing through the sample the pulsed current promotes the processes of sintering and further removal of additionally introduced material. Presence of additional components in a scintillation material impedes transparency and reduces scintillation performance. Other way developed for heating of a sample is inspiration of an influence with micro wave irradiation. Preliminary experiments showed that it was necessary to increase the applied power and frequency of irradiation.

At precise temperature measurements the thermocouple is introduced directly in the middle of a sample. In some cases during the processes of sintering, at starting point of

compacting and at passing of current pulses, there was detected superposition of thermal electric moving force (e.m.f) and the e.m.f. induced by external pulses. Upon measuring voltage with integrating voltmeter the thermocouple showed inaccuracy at temperature measurements. For annihilation of this inaccuracy i.e. for annihilation of an inaccuracy of the influence of the passing current on the e.m.f. there was developed a special scheme (Fig.7). There was used instrumentation amplifier 22, sample-and-hold unit 23, comparator 25, matching 26, measuring integrating voltmeter 24, divided by temperature.

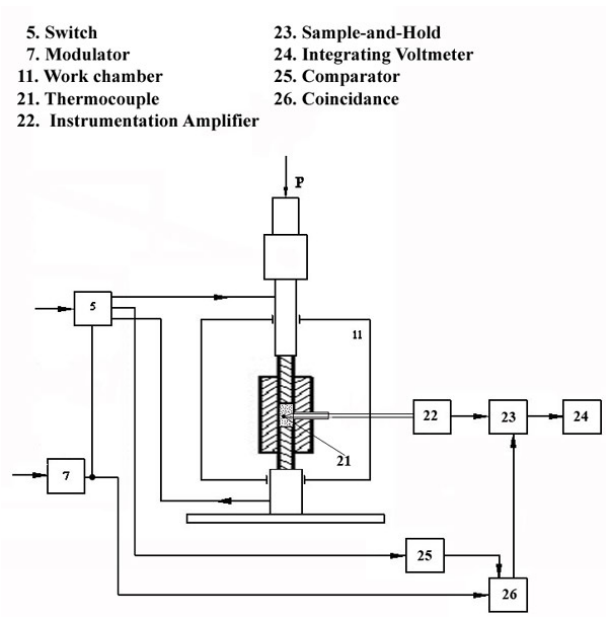

Fig. 7. Block-scheme of measuring a sample temperature

3 CONCLUSION

In this study we have investigate Spark Plasma synthesis process its advantages and problems. Our main goal to preserve nanocrystallinity in to the bulk specimen was achieved only with conductive materials. Previous investigations showed that with a dielectric material, we could not apply a conventional SPS method for achieving. For the solution of the stated problems there has been developed a technology and an appropriate device was designed on the basis of the modified SPS method.

REFERENCES

[1]. Y. V. Bykov, K. I. Rybakov, and V. E. Semenov, “High–temperature Microwave Processing of Materials,” Journal of Physics D: Applied Physics, 34, (2001), R55-R75.

[2]. V. Mamedov, “Spark Plasma Sintering as Advanced PM Sintering Methods,” Powder Metallurgy, 45 [4] (2002), 323-328.

[3]. J. R. Groza, “Nanocrystalline Powder Consolidation Methods,” in C. C. Koch (Ed.), Nanostructured Materials, Noyes Publications, Williams Andrew Publishers, NY, 2002, 115-178.

[4]. K. C. Cho, R.H. Woodman, B. R. Klotz, and R. J. Dowding, “Plasma Pressure Compaction of Tungsten Powders,” Materials and Manufacturing Processes, 19 [4], 2004, 619-630.

[5]. D. Jia, K. T. Ramesh, and E. Ma, “Effects of Nanocrystalline and Ultrafine Grain Sizes on Constitutive Behavior and Shears Bands in Iron,” Acta Materialia 51, (2003), 3495-3509.

[6]. E. Lassner and W. Schubert, Tungsten: Properties, Chemistry, Technology of Element, Alloys, and Chemical Compounds, Kluwer Academic/Plenum Publishers, NY 1998.